5.0 PRELIMINARY SOURCE AND LOADING ESTIMATES

Our conceptual understanding of the behavior of mercury in each of the water body types has been discussed in the preceding section. In this section we put together a first-cut estimate of the movement of mercury loads through the Guadalupe River Watershed, using the best available data on mercury concentrations and water flows. Although much of the data needed for making a definitive estimate does not exist at this time, the exercise of making load estimates in the manner described here identifies the most needed information. **The load estimates presented in this section are preliminary and subject to revision.** As we work toward completing the TMDL, the reliability of the load estimates will continue to be improved with more data and improved process understanding.

To perform a preliminary estimate of the movement of mercury in the Guadalupe Watershed, we divided the watershed into five groups of water bodies: 1) reservoirs, 2) streams and creeks in the upper watershed (above Ross Creek) draining the historic mercury mine areas, 3) creeks in the upper watershed draining areas not known to contain mines, 4) Guadalupe River downstream of Almaden Lake to St. Johns Street, and 5) Guadalupe River from St. Johns Street to Alviso Slough. The basis for these divisions is the similarity in mercury sources and transport and transformation characteristics in each of these types of water bodies. For example, reservoirs are expected to settle out particulate mercury and provide sites for methylmercury production in the hypolimnion and perhaps the epilimnetic sediments. Creeks draining the historic mining areas are not perennial, and are expected to have high flows and mercury loads following winter rain events. Creeks not draining the historic mined areas also contain mercury, albeit at lower concentrations, apparently derived from natural background sources and from atmospheric deposition.

Figures 5-1 and 5-2 provide summaries of the existing source and loading information for dry and wet weather seasons, respectively. Calculations are shown for a typical mid-summer day and for a large storm event in winter. The available information at twelve locations in the watershed is represented in box diagrams, an example of which is shown below:

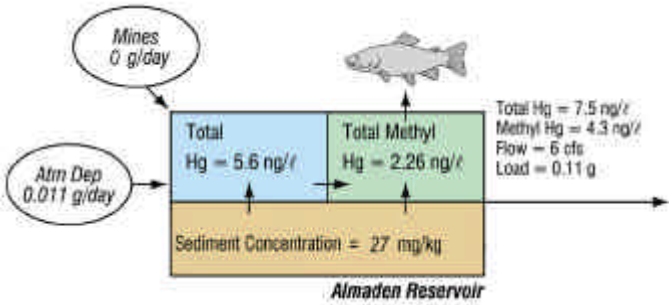

Available estimates of both total and methylmercury concentrations in the water-column and total mercury concentrations in the sediments are presented in each box. For example, the estimates of total and methyl mercury concentrations in the surface water samples at Almaden Reservoir are 5.6 ng/l and 2.26 ng/l, respectively, based on measurements made in the 2003 Synoptic Survey (Tetra Tech, 2003d). The values on the arrow exiting the box (7.5 ng/l and 4.3 ng/l) are measurements of total and methyl mercury made at the outlet to the reservoir on Alamitos Creek. The daily load estimate (0.11 g total mercury) is shown below the arrow and is calculated as the product of the total mercury concentration (7.5 ng/l) and the flow measurement (6 cfs) obtained from the SCVWD ALERT system (SCVWD, 2003) for the day of sample collection.

Estimates of mercury in urban runoff were calculated as follows: the sediment load was assumed to equal that reported in an urbanizing California watershed (Trimble, 1997), 153 x 10^3 kg/km^2/yr and the mercury content in the sediment was assumed to be 0.5 mg/kg, a value used to estimate mercury in urban runoff for the San Francisco Bay mercury TMDL (Abu Saba and Tang, 2000). Furthermore, runoff occurs predominantly in the wet season and the sediment load was calculated as a daily value spread over the six months of the year that typically receives rainfall. Urban runoff was considered to be insignificant except in the highly urbanized downstream portion of the watershed.

Sediment erosion from the Almaden Quicksilver County Park was considered to be the principal source of mine-waste derived mercury to the water bodies in the watershed. Sediment erosion was approximated at a rate of 60 x 10^3 kg/km^2/yr from the park, based on a site specific calculation performed for the Jacques Gulch watershed (Mike Burnham, personal communication) with mine sediments containing mercury at an concentration of 25-65 mg/kg (based on measurements within the park) and with 20 percent of the park area covered by mines. The remainder was covered by minerals with a background concentration estimated to be 1 mg/kg. The park area that fell in each of the subwatersheds was calculated to estimate how much mine

waste mercury would enter each water body. The major water bodies (in Figure 5.1 and 5.2) that receive mine waste and derived loads either or directly through tributaries are Guadalupe and Almaden Reservoirs and Guadalupe and Alamitos Creeks. Mine wastes from Almaden Quicksilver County Park are transported via runoff; they are considered to make no direct contribution to the loads in the dry season. Although measurements of mercury in waters upstream of the reservoirs have been made and described in chapter 2, there were no co-located flow measurements to allow us to directly calculate loads. However, using the volume of rainfall within the park boundary, and assuming 75 percent of it becomes runoff, the estimated load calculated using the sediment-erosion approach corresponds to a volume-averaged concentration of ~380 ng/l in the runoff to Guadalupe Reservoir and Guadalupe Creek, and to a concentration of ~ 910 ng/l in runoff to Almaden Reservoir and Alamitos Creek.

Sediment removal estimates from various water bodies for the next ten years, listed in Table 2-3, were used along with sediment concentration data shown in Figures 5.1 and 5.2, to compute the mass of mercury that could be removed. Annual sediment load estimates were converted to a daily estimate.

The atmospheric deposition input was estimated as a daily load using wet and dry deposition data collected by SFEI at various locations around San Francisco Bay. Wet deposition was estimated using a rainfall concentration of 9.7 ng/l (SFEI, 2001) and a rainfall amount of 48 inches in the watersheds tributary to the reservoirs, and a rainfall amount of 14 inches for the rest of the watershed. Annual wet deposition was estimated as 11.6 ug/m^2/yr in the upper watershed and 3.4 ug/m^2/yr in the lower watershed. The annual dry deposition was estimated as 19 ug/m^2/yr (SFEI, 2001) throughout the system. For the dry season, it was assumed that the only load to the reservoirs was dry deposition. For the wet season, corresponding to half the year, in addition to direct deposition, 30 percent of the wet and dry deposition to the watersheds was delivered to the reservoirs and streams, with 70 percent being retained in the watershed. This is a relatively conservative value of retention percentage, values as high as 95-98 percent have also been reported in the literature (Grigal, 2002). These preliminary estimates will be improved as direct runoff mercury concentration data become available.

For Calero Reservoir, which receives inflows from the Central Valley Project and Almaden Reservoirs, the inflow volumes were based on data provided by the District. The Central Valley flow was assumed to be 3,700 acre-feet (average of 2001 and 2002 values) and was applied only during the summer months. The mercury concentration in this source was assumed to be 1ng/l . The Almaden Calero transfer was assumed to be 2,700 acre-feet (based on data for 2001), and applied only during the winter months. The concentration of mercury in this source was assumed to be the same as the outflow from Almaden Reservoir measured in Alamitos Creek.

FIGURE 5-1
DAILY SUMMER LOADS AND CONCENTRATIONS
(JULY 28 - AUGUST 1, 2003)

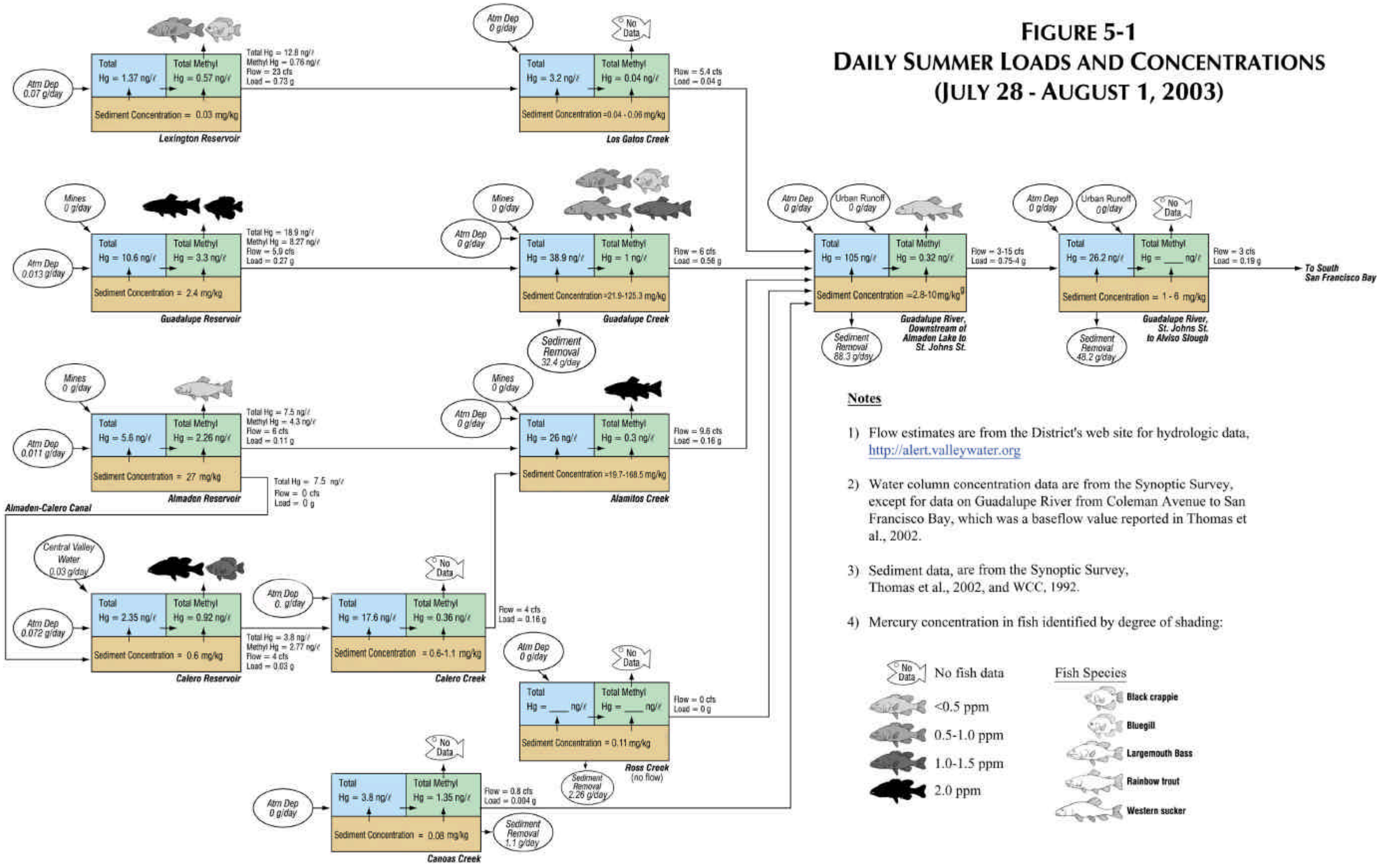

Notes

1) Flow estimates are from the District's web site for hydrologic data, http://alert.valleywater.org

2) Water column concentration data are from the Synoptic Survey, except for data on Guadalupe River from Coleman Avenue to San Francisco Bay, which was a baseflow value reported in Thomas et al., 2002.

3) Sediment data, are from the Synoptic Survey, Thomas et al., 2002, and WCC, 1992.

4) Mercury concentration in fish identified by degree of shading:

FIGURE 5-2
ESTIMATED DAILY LOADS AND CONCENTRATIONS DURING A LARGE WINTER STORM (DECEMBER 15-16, 2002)

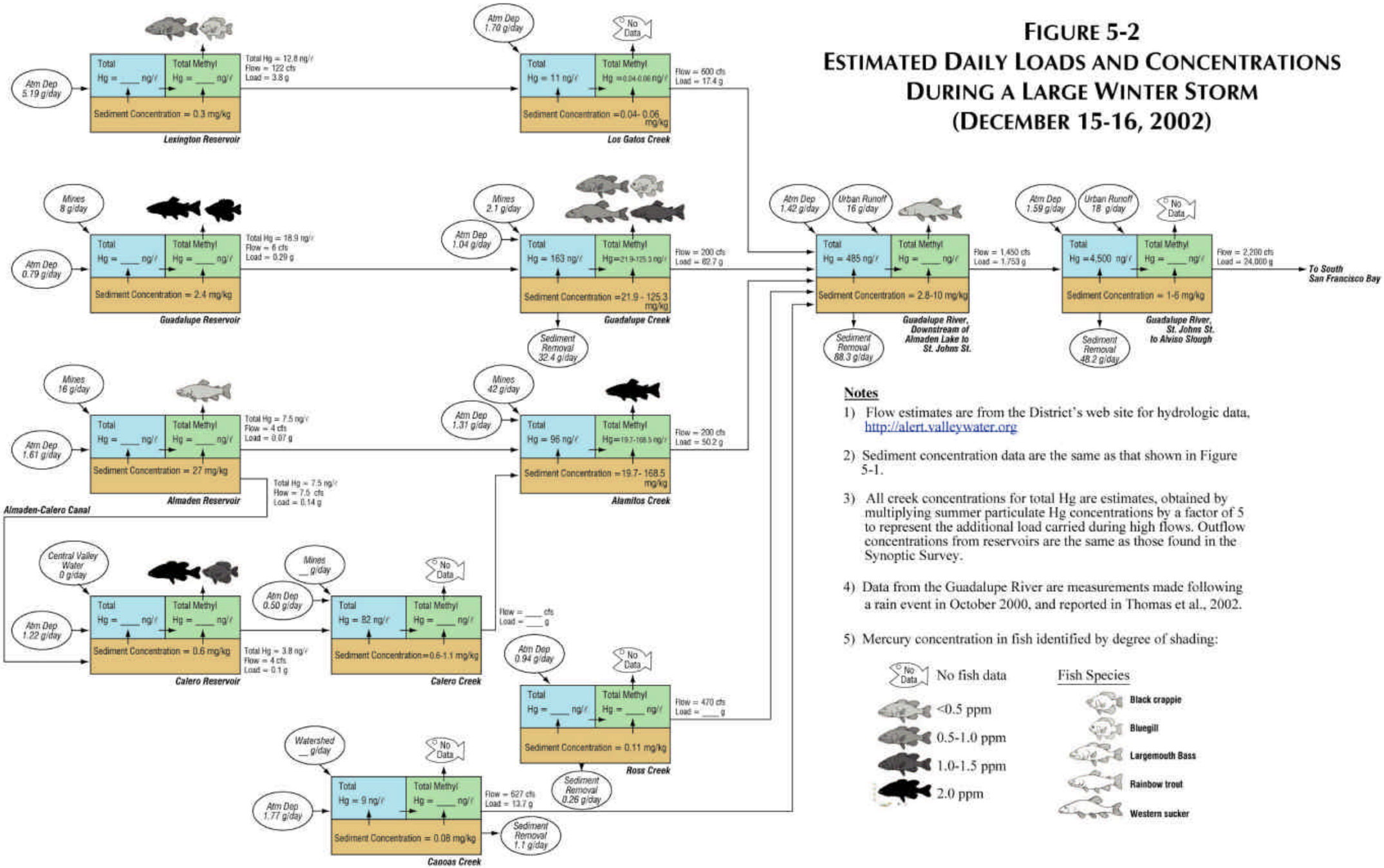

Notes

1) Flow estimates are from the District's web site for hydrologic data, http://alert.valleywater.org

2) Sediment concentration data are the same as that shown in Figure 5-1.

3) All creek concentrations for total Hg are estimates, obtained by multiplying summer particulate Hg concentrations by a factor of 5 to represent the additional load carried during high flows. Outflow concentrations from reservoirs are the same as those found in the Synoptic Survey.

4) Data from the Guadalupe River are measurements made following a rain event in October 2000, and reported in Thomas et al., 2002.

5) Mercury concentration in fish identified by degree of shading:

The limited fish mercury bioaccumulation data (Table 2-10) are also presented for each location. Fish species are represented pictorially. The average mercury concentration in fish is represented by the degree of shading:

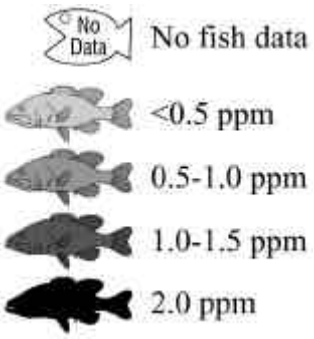

An empty fish symbol

is used where no fish mercury data are available.

5.1 DRY WEATHER ESTIMATES

Load estimates were calculated separately for the wet and dry season because of the dramatically different flow conditions in each season. The interconnections between the water bodies are represented in Figure 5-1, along with typical summer flows that occurred in late July 2003 during the Synoptic Survey conducted for this study (Tetra Tech, 2003d). Reservoir releases were generally low, on the order of 4-6 cfs, with the exception of Lexington Reservoir (23 cfs). Total flow in Guadalupe River downstream of Almaden Lake was estimated to be between 3 and 15 cfs. The creek reaches appear to be losing water with travel distance downstream. At the time of the Synoptic Survey, because of construction, there was no flow in Guadalupe River in downtown San Jose, and a typical dry season flow value of ~3 cfs was estimated from prior records. Using the flows and the mercury concentrations measured in the Synoptic Survey (Tetra Tech, 2003d), we estimated the loads flowing at different points in the watershed. Daily loads from the two reservoirs in the historic mining areas are a significant source (0.56 g and 0.16 g) and far exceed the loads from the reservoirs in the non-mining areas (0.04 and 0.004 g). Atmospheric deposition load appears to be relatively insignificant during the dry season. The daily loads in Guadalupe River downstream of the confluence with Los Gatos creek is estimated to be 0.75-4 g, and at a location further downstream, the USGS station in San Jose, the loads estimated from base flow data in Thomas et al. (2002) are 0.19 g. During the dry season, one may hypothesize that the reservoirs in the mining area are the major source of methylmercury downstream.

5.2 WET WEATHER ESTIMATES

Although detailed survey data were not available for wet-season flows, we produced estimates using flow data following a large storm on December 15 and 16th 2002, and using wet-season mercury data from Thomas et al. (2002). Estimated mine-waste derived loads were 8 and 16 g/day for the Guadalupe and Almaden Reservoirs, and 2.1 and 42 g/day for Guadalupe and Almaden Creeks, respectively. Mine waste loads were not considered to affect the other water bodies shown in Figure 5-1 and 5-2 directly. For three of the reservoirs, Guadalupe, Calero, and Almaden, downstream flow data indicates release values not very different than those during the dry season Synoptic Survey (4-6 cfs); Lexington Reservoir had a significantly higher discharge of 122 cfs. Because of the similarity of flows in 3 of the 4 reservoirs, we assumed that the total mercury concentrations flowing out of the reservoirs were the same as during the dry season. Total flows in the creeks some distance downstream of the reservoir outlets were much higher than in the dry season. We had gauge data at several locations, such as Los Gatos Creek, Canoas Creek, Ross Creek, Guadalupe River downstream of the creeks, and Guadalupe River in San Jose. Flows in Guadalupe Creek and Alamitos Creek were estimated by difference. The measured and estimated flows are shown in Figure 5-2.

The mercury concentrations in the creeks were all estimated using the following, very approximate, approach: particulate mercury was assumed to be 5 times the dry season value, and the dissolved mercury was assumed to remain unchanged. This is based on data from Thomas et al. (2002) who showed the sharp increase in particulate mercury during high flow events, and is consistent with the conceptual model of mercury transport described earlier. Using these flows and concentrations, we estimate that Guadalupe Creek and Alamitos Creek are a significant source of downstream mercury (82.7g/day and 50.2 g/day, respectively), although the reservoirs themselves are responsible for only a small part of this load (0.29g/day, 0.07 g/day, and 0.1 g/day directly downstream of Guadalupe, Alamaden, and Calero Reservoirs, respectively). Furthermore, it appears that under wet conditions, atmospheric deposition loads to the reservoirs may be of the same order of magnitude as the reservoir outflows, although as one travels downstream, the atmospheric contributions appear to become relatively small, because of the increasing mercury contribution of ephemeral streams in the sub-watersheds. Downstream of Almaden Lake, the loads estimated in Guadalupe River are much higher than the loads coming out of all four reservoirs (>1,700 g/day). Although it is likely that this load is estimated with poor precision (see below), the fact that it is so much higher than the reservoir loads indicates the possibility of bank erosion as a distinct source during high flow events. The estimated load at downtown San Jose (at the USGS gauge station near St. Johns Street) was computed from a sediment-flow relationship derived for Guadalupe River (NHC, 2000). Because the average flows during this storm are very high, the estimated sediment load is also estimated to be high: 28,000 tons per day total load, including 1,700 ton/day of bed load. At this sediment transport rate, assuming a mercury concentration on the particles of 0.8 mg/kg (Thomas et al., 2002), the calculated load is estimated to be

24,000 g/day, of which 1,400 g/day is transported by bed load. A storm of this magnitude is relatively rare in the Guadalupe watershed, and the mercury load estimate is biased high. Nevertheless, this calculation underscores the point that loads transported during high flow events can dwarf loads estimated for the dry season. A more detailed estimate of the sediment mercury loads at the USGS gauge station at St. Johns Street is discussed below.

5.3. Annual variability of Mercury Loads at the USGS Gauge Station at St. Johns Street, San Jose

Using historical daily streamflow data from 1950 to 2001, obtained from the USGS, and using the sediment-flow rate relationship calculated for Guadalupe River (NHC, 2000), we computed the daily suspended sediment and bed load transported by the river over this period. Further, using an estimate of mercury concentration on particles (both suspended sediment and bed load) of 0.8 mg/kg (Thomas et al., 2002), we calculated the daily mercury load transported downstream at the USGS gauge station. These mercury loads were summed over each calendar year and are shown as histograms of annual load in Figure 5-3. The estimated bed load of mercury ranged from 300 g/year to 66,000 g/year, the estimated suspended sediment load of mercury ranged from 1,600 to 890,000 g/year. Also shown in this figure is the very high variability of annual discharge (900 to 204,000 acre-feet per year). The mercury load and annual discharge exhibit the same general distribution with a large number of values at low levels and with an extended tail.

5.4. Uncertainty

Of the load calculations presented in this section, reservoir loads can be estimated with greater precision because the outflows are relatively uniform throughout the year and are monitored continuously.

At the other extreme, loads in the downstream end of the watershed are highly variable and are estimated with very limited precision. This is because flow, sediment load, and transported mercury concentrations can all be highly variable during the wet season. During large rainfall events, flows can increase to several thousand cfs for short durations with associated increases in suspended sediment and mercury concentrations. To compute loads under such conditions, one needs multiple measurements of flow and total mercury with a high temporal resolution. Estimates made using an average daily concentration and a spot measurement of mercury concentration may yield a highly uncertain estimate of the delivered loads. This caveat also applies to all estimates of loads transported in creeks, where winter flows can vary greatly over short time periods. More intensive temporal sampling is recommended during winter storms, where the variability of flow and concentrations are high.

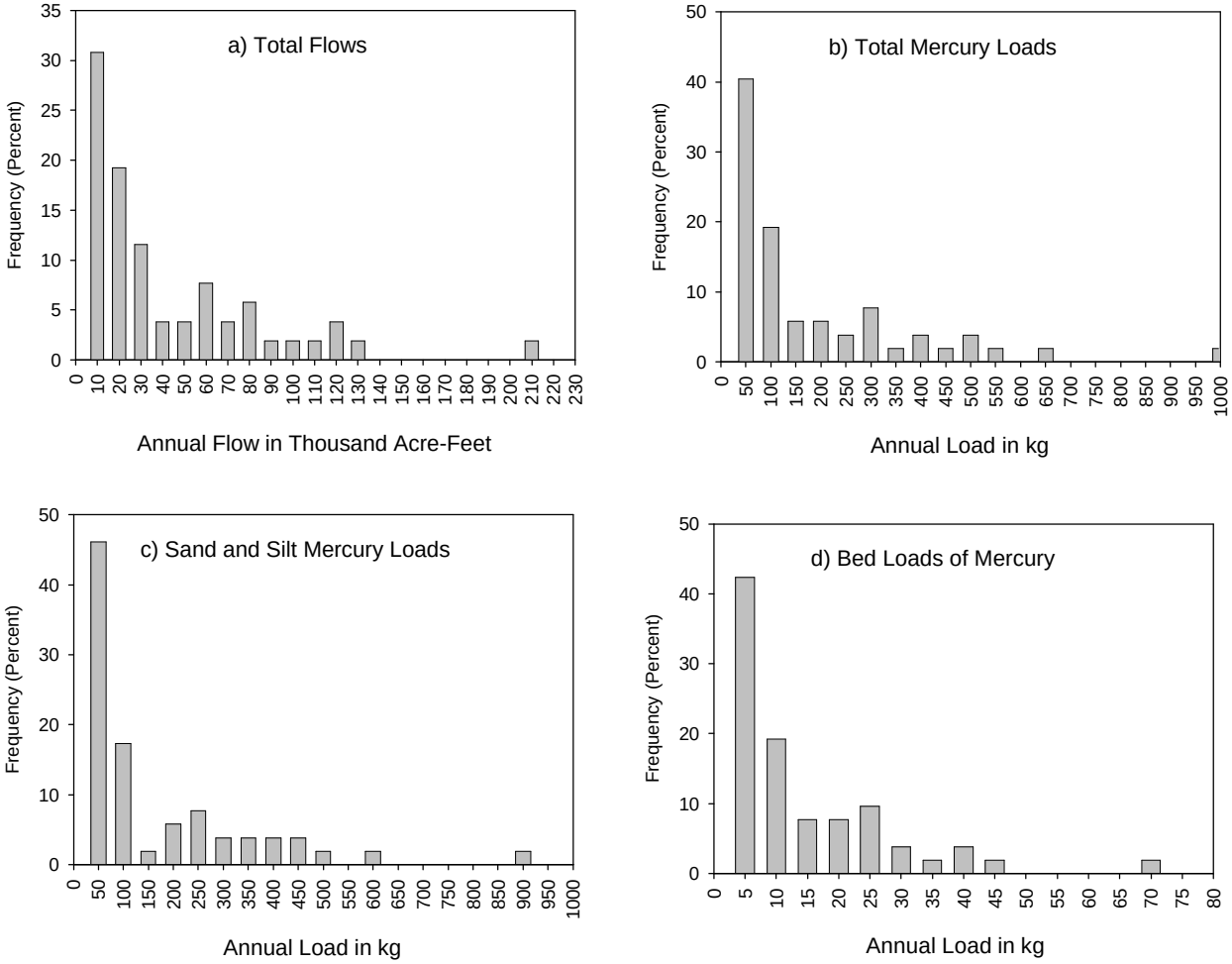

Figure 5-3. Histograms of (a) annual flows of water, (b) total transported loads of mercury, (c) mercury transported as suspended sediment (sand and silt), and (d) mercury transported as bed load. Flows are from the USGS, sediment loads are estimated using flow-sediment relationship from NHC (2000), and mercury concentrations on sediment are from Thomas et al. (2002).

Most of the other loads calculated in Figure 5-1 and 5-2 (atmospheric deposition, sediment removal, mine waste contributions, urban runoff) are estimated from a very limited number of measurements, or are based on data not specific to the Guadalupe River Watershed, and should be considered as preliminary with high uncertainty associated with them. These estimates will be improved with the collection of more temporally and spatially detailed data.

Load calculations shown in Figure 5-3 are at a location few miles upstream of the confluence of Guadalupe River and south from San Francisco Bay where data were available. It is possible that some of the sediment load is deposited before it finally reaches the bay, adding to the uncertainty of the estimated delivered mercury to the bay.

5.5. SUMMARY OF FINDINGS FROM LOAD ESTIMATES

Aside from the role of uncertainty discussed above, several conclusions of a preliminary nature can be drawn from the calculations presented in Figure 5-1 and 5-2:

- Winter flows appear to deliver practically all of the total mercury load transported downstream
- All four reservoirs act as mercury sinks, with more mercury entering them than exits in their outflows
- Mine waste derived loads are substantially greater than atmospheric deposition in Guadalupe and Almaden Reservoirs, and Guadalupe and Alamitos Creeks
- Atmospheric deposition may be a significant part of the total mercury loads entering Lexington and Calero Reservoirs.
- The loads of mercury at the downstream portion of the Guadalupe Watershed are strongly dependent on flows, and can exhibit a wide range; the load estimated of 92 kg/year by the Regional Water Quality Control Board (Johnson and Looker, 2003) is well within this range.